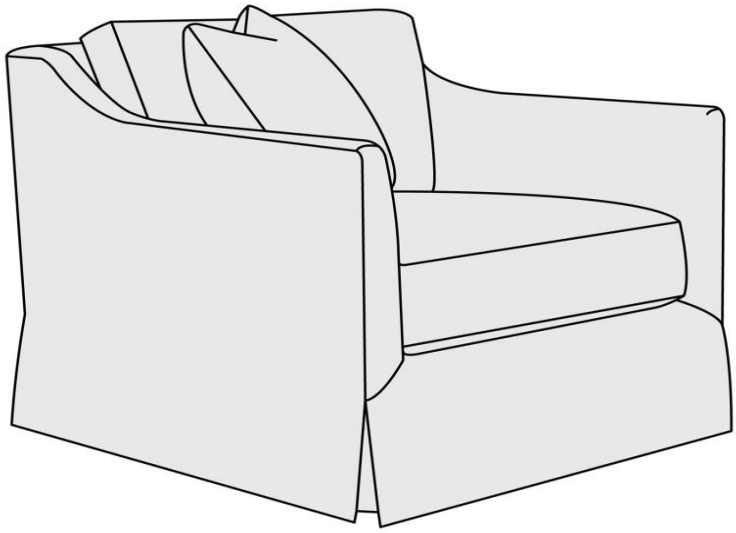

Langley Fabric Swivel Chair

Item
B1722S

Seat Width
27.5 in
69.85 cm

Dimensions
BA: 27.5 in
BA: 69.85 cm
SD: 23 in SH: 18.50 in AH: 27.00 in
SD: 58.42 cm SH: 46.99 cm AH: 68.58 cm
W: 36.50 in D: 38.5 in H: 32.5 in
W: 92.71 cm D: 97.79 cm H: 82.55 cm

Pillows
• Throw Pillow 1: TP20D - 20" x 20" Blendown Knife-edge without welt

Features
- Modern style
- Linear arms
- Knife-edge pillow
- Throw pillow included
- Swivel base
- Specifications subject to change without notice

Options
- This item # is available for special order.
- For the standard fabric/finish combination(s), view the B1722SA
- Available in other fabrics or COM.
- The throw pillows are available in other fabrics or COM.
- Available without throw pillows. View the B1722SY